Adtran

SDG-9712o

Hardware Guide

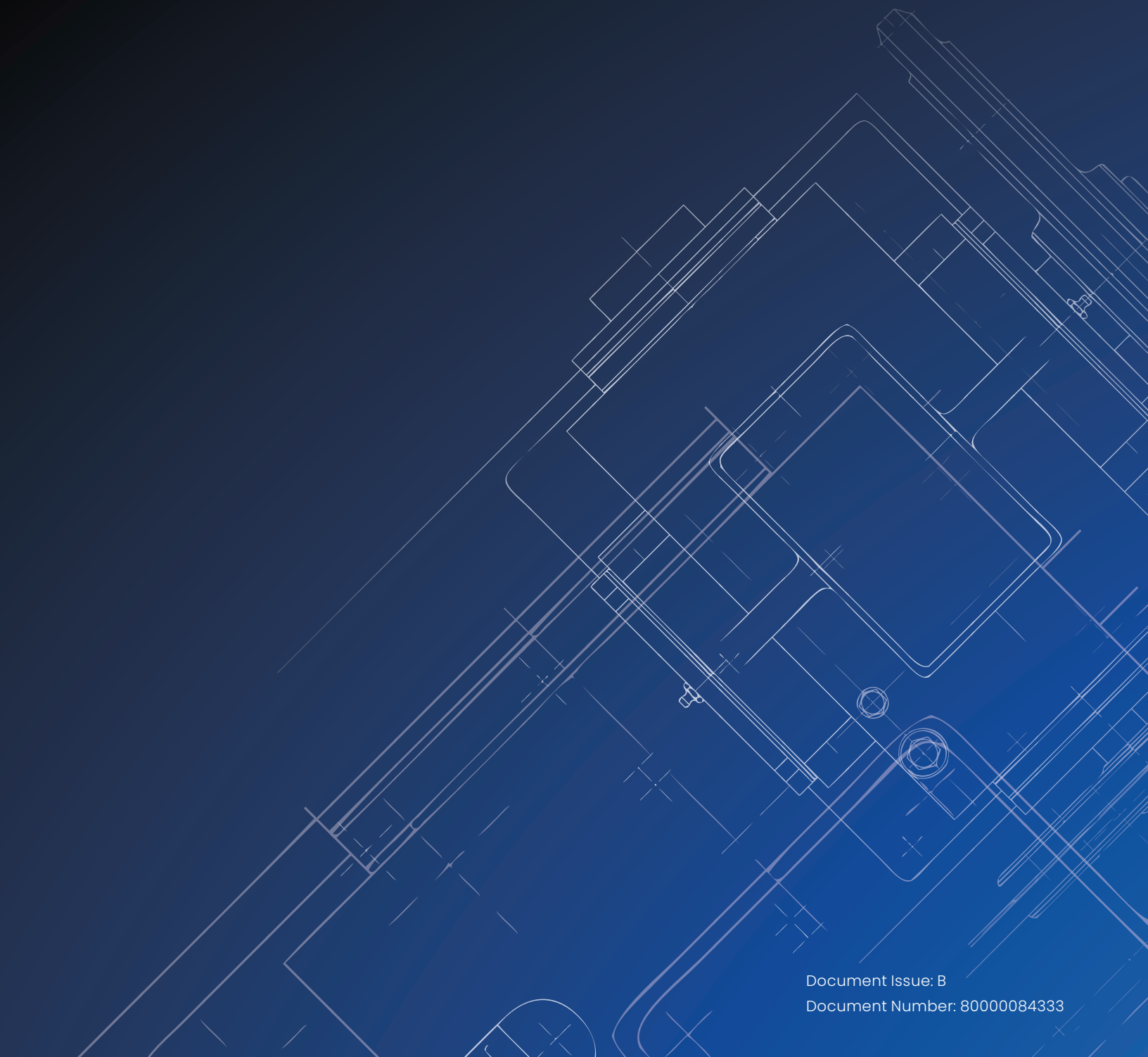

Document Issue: B
Document Number: 80000084333

Disclaimer of Liability

The information or statements given in this document concerning the suitability, capacity, or performance of the mentioned hardware or software products are given “as is”, and any liability arising in connection with such hardware or software products shall be governed by Adtran’s standard terms and conditions of sale unless otherwise set forth in a separately negotiated written agreement with Adtran that specifically applies to such hardware or software products.

To the fullest extent allowed by applicable law, in no event shall Adtran be liable for errors in this document for any damages, including but not limited to special, indirect, incidental or consequential, or any losses, such as but not limited to loss of profit, revenue, business interruption, business opportunity or data, that may arise from the use of this document or the information in it.

“Adtran” and the Adtran logo are registered trademarks of Adtran, Inc. Brand names and product names included in this document are trademarks, registered trademarks, or trade names of their respective holders.

Copyright © 2026 Adtran, Inc.
All Rights Reserved

Contents

Disclaimer of Liability 2
Contents 3
Preface 5
Safety Symbol and Message Conventions 5
Related Documentation 6
Revision History 7
Warranty 7
Contact Adtran 8
Chapter 1: Introduction 9
Overview 9
Shipment Contents 11
Specifications 12
Chapter 2: Pre-Installation Considerations 15
Mounting Options 15
PoE+ Powering Considerations 15
Grounding Considerations 16
Chapter 3: Installation 17
Installation Guidelines 17
Electrical Safety Information 18
Professional Installation 18
Installation Location 19
Required Equipment 20
Mounting the SDG-9712o 21
Wall Mounting the SDG-9712o 21
Pole Mounting the SDG-9712o 23
Grounding the SDG-9712o 25
Connecting the PoE+ Port 26
Verifying the Power Connection 26
Configuring the SDG-9712o 27
Configuring the Software 27

Chapter 4: Troubleshooting 28
LED 28
Reset Button 29
Chapter 5: Safety and Regulatory 30
Regulatory Compliance 31
Europe - EU Declaration of Conformity 31
FCC Requirements for Operation in the United States 32
FCC Information to User 32
FCC Guidelines for Human Exposure 33
FCC Declaration of Conformity 33
FCC Radio Frequency Interference Warnings and Instructions 33
CAN ICES-3(B)/NMB-3(B) 34
Canadian Department of Communications Radio Interference Regulations 34
Industry Canada 34
RSS-247 35

Preface

This document is intended for Adtran customers under the terms of the applicable agreement. No part can be used, reproduced, modified, or transmitted in any form without prior written permission from Adtran.

NOTE

The illustrations in this document are for reference only. They are based on the latest hardware revision available at the time of publication. The equipment you receive might have a different appearance than the equipment shown in this document.

This section contains these topics:

Safety Symbol and Message Conventions 5
Related Documentation 6
Revision History 7
Warranty 7
Contact Adtran 8

Safety Symbol and Message Conventions

These symbols appear throughout this document and include important information related to your safety and the prevention of equipment damage.

All personnel should correctly follow and not ignore any provided safety instructions. Before you work on any equipment, be aware of the hazards involved and be familiar with standard practices for preventing accidents.

Icon	Meaning	Description
	Warning	Means danger and alerts you to a situation that could cause death, injury, or serious property damage.
	Electric Voltage Warning	Means danger and alerts you to risks caused by electricity that could result in death or serious injury.

Icon	Meaning	Description
	Caution	Alerts you to a potentially hazardous situation or condition that may result in minor or moderate injury, service interruption, damage to equipment, or minor property damage.
	Lifting Hazard Caution	Indicates a potentially hazardous situation or condition that may result in a personal injury or damage to equipment due to the weight of an object.
	Electrostatic Caution	Indicates the possibility of equipment damage due to electrostatic discharge (ESD).
NOTICE	Notice	Indicates the risk of equipment damage, malfunction, process interruption, or negative impacts on surroundings.
	Documentation	Advises of the importance of carefully reading all instructions before proceeding or provides links to additional information.
	Note	Indicates supplemental information or helpful recommendations.

Related Documentation

You can view and download the Adtran product documentation from our documentation portal. To access our documentation portal, click one of these options:

- docs.adtran.com
- My Adtran > **Support Community** > **Technical Documentation**

After logging in, select the appropriate product category. Use the **Group by** option at the top to sort documents by **title** (default) or **release number** within the product categories.

Use the robust search engine to find documents by part name or number, alarm name, specifications, procedures, and more. You can refine results by filtering on **product category**, **document type** (title), and **release number**.

Here are some related documents:

- *SDG SmartOS User Guide*
- Applicable release notes based on firmware
- *Intellifi® User Guide*
- QR code card — shipped with product

Revision History

Revision	Description
Document Number: 80000084333 **Document Issue:** B **Issue Date:** September 2026	Updated: • Overview • Specifications • Installation Location • Safety and Regulatory
Document Number: 80000084333 **Document Issue:** A **Issue Date:** March 2026	Initial release.

Warranty

Warranty information can be found at: my.adtran.com/warranty

Contact Adtran

Contact	Contact Information
Technical Support	Toll Free: +1-888-423-8726 International: +1-256-963-8716 Europe: +44 20 7523 5358 support@adtran.com adtran.com/GetStarted
Training	training@adtran.com adtran.com/training
Sales	+1-800-827-0807
Other	adtran.com/ContactUs

Chapter 1: Introduction

This section contains these topics:

Overview 9
Shipment Contents 11
Specifications 12

Overview

The SDG-9712o is a weather-hardened, dual-band access point designed to deliver top-end Wi-Fi 7 performance (2.4 GHz and 5 GHz), multi-gigabit throughput, and advanced service delivery capabilities in outdoor environments. The SDG-9712o facilitates extended outdoor coverage, seamlessly connecting laptops, mobile phones, tablets, smart home devices, and other Wi-Fi clients throughout a property or in common areas of multi-dwelling units (MDUs). Flexible deployment options allow the SDG-9712o to obtain backhaul connectivity through either a wired multi-gigabit Ethernet WAN connection or a wireless WAN link, enabling service providers to extend broadband access to locations where wired infrastructure may be limited or unavailable.

Figure 1: SDG-9712o

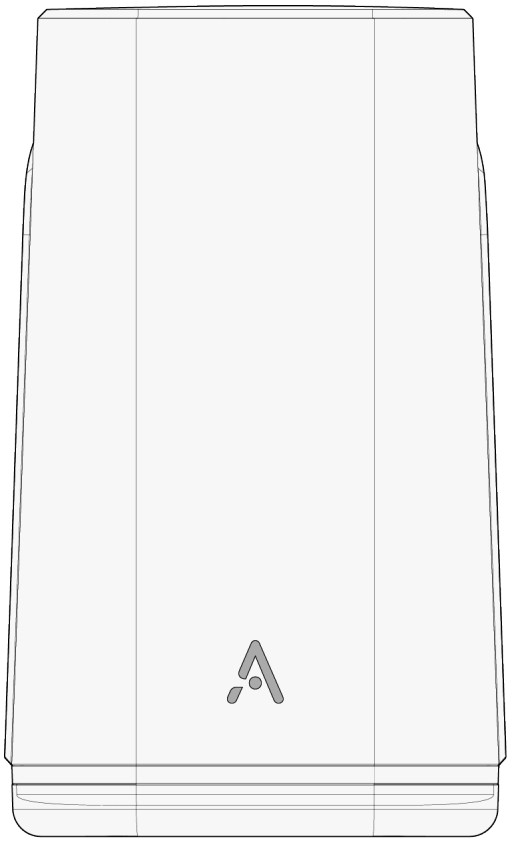

Front view

Table 1: Versions of the SDG-9712o

Description	Part Number
SDG-9712o	17600082FNS

Figure 2: SDG-9712o—Bottom View with Cover

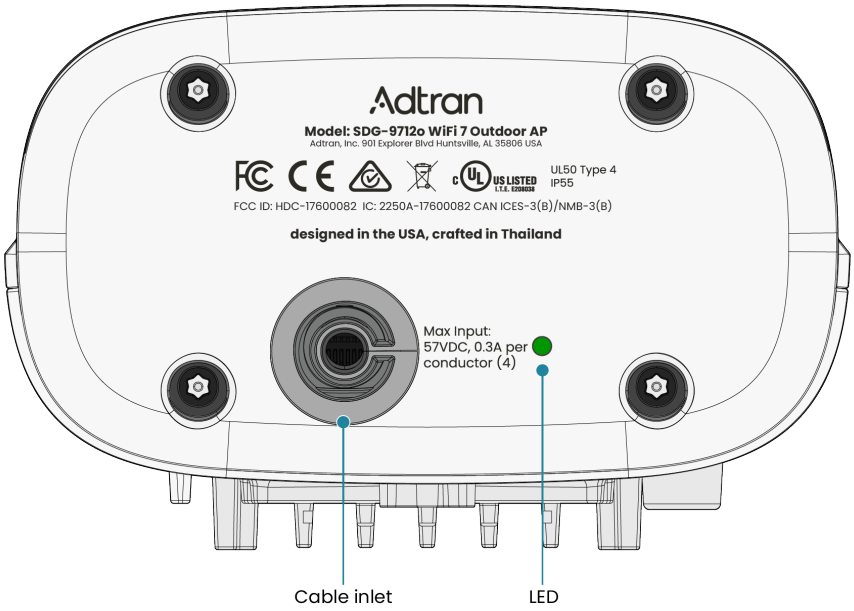

Figure 3: SDG-9712o—Bottom View without Cover

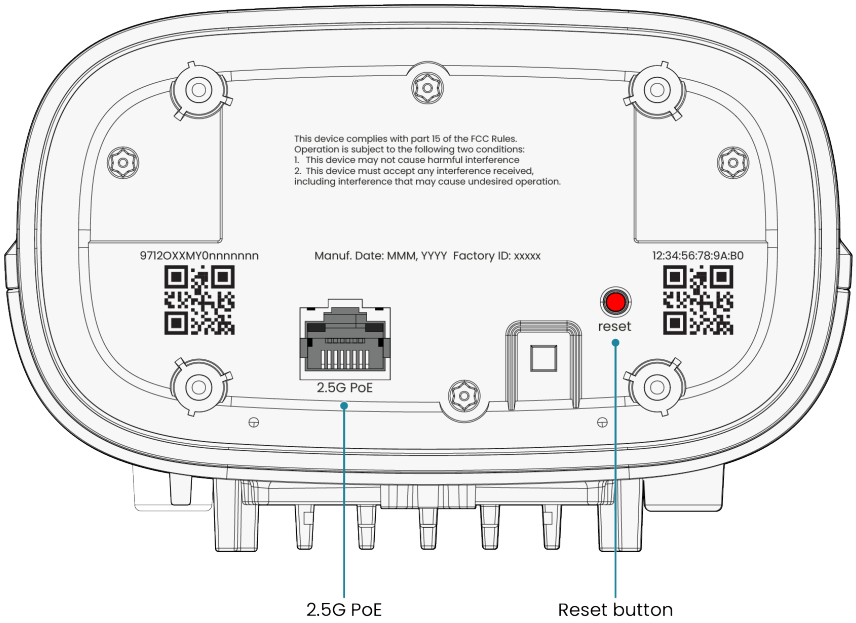

Shipment Contents

- SDG-9712o Wi-Fi 7 outdoor access point with two T15 Torx mounting security screws
- SDG-9712o Outdoor Combo Mounting Kit with a mounting bracket
- T15 Torx security bit
- Two metal straps — for pole mounting

Specifications

Electrical

- Nominal input: 54 VDC Power over Ethernet
- Nominal Power Consumption: 11.4 W
- Networked Standby (Commission Regulation [EU] 2023/826 using sampling method as described in EN 50564:2011)
  - Networked Standby (SDG-9712o power consumption only)
    - 5 GHz Wi-Fi: 6.4 W (6.9 W if used for reactivation)
    - 2.4 GHz Wi-Fi: 6.1 W (6.3 W if used for reactivation)
    - All Ports: 6.6 W
  - Networked Standby (SDG-9712o with Generic PSE consumption included)
    - 5 GHz Wi-Fi: 8.0 W (8.4 W if used for reactivation)
    - 2.4 GHz Wi-Fi: 7.7 W (7.8 W if used for reactivation)
    - All Ports: 8.2 W
  - This equipment is classified as networked equipment and is considered to be *networked equipment with high network availability* (HiNA equipment). It does not support a standby mode or another equivalent state in terms of energy efficiency requirements, nor does it include power management functionality defined in Annex III 2(c) in Commission Regulation (EU) 2023/826, as these are inappropriate for the intended use. Consequently, its power consumption may be higher than that of equipment that are not HiNA devices.
  - The SDG-9712o switches into networked standby within one minute of not performing its primary function and immediately switches out of networked standby once the primary function resumes.
  - All ports are activated at delivery and depend on the connection of the 2.5 GbE POE port for Power over Ethernet.

Physical

- Height: 8.5 in. (21.6 cm)
- Width: 5.1 in. (12.9 cm)
- Depth: 2.9 in. (7.4 cm)
- Weight: 2.38 lbs (1.08 kg)

Environmental

- Operating Temperature: –22°F to 131°F (–30°C to 55°C)
- Storage Temperature: –40°F to 158°F (–40°C to 70°C)

- Transportation Temperature: –40°F to 158°F (–40°C to 70°C), any humidity
- Operating Humidity: 5 to 95 percent, condensing
- Rated IP 55 and UL 50, Type 4

Compliance

- United States
  - NRTL Listed to UL/CSA 62368-1
  - FCC Part 15C (DTS) / Part 15E (NII/UNII)
  - FCC Part 15B, Class B (Unintentional Radiator/EMC)
  - FCC Part 2, §2.1091 (MPE)
- Canada
  - NRTL Listed to UL/CSA 62368-1
  - ICES-003 (Issue 7)
  - RSS-247 (Wi-Fi, ISED Canada)
  - RSS-102 (MPE, ISED Canada)
- European Union
  - CE Marking
  - Radio Equipment Directive (RED) 2014/53/EU
  - EMC Directive 2014/30/EU
  - Low Voltage Directive (LVD) 2014/35/EU
  - IEC/EN 62368-1
  - EU RoHS Directive 2015/65/EU (as amended by 2015/863/EU)
  - WEEE Directive 2012/19/EU
- United Kingdom
  - CE Marking
  - UK Radio Equipment Regulations 2017 (SI 2017/1206)
  - IEC/EN 62368-1
  - UK RoHS Regulations 2012 (as amended)
  - UK WEEE Regulations 2013 (as amended)
- Australia / New Zealand
  - ACMA/RCM
  - AS/NZS 62368.1

- International
  - ITU-T K.21 Enhanced

NOTE

Changes or modifications not expressly approved by Adtran voids the warranty.

Chapter 2: Pre-Installation Considerations

This section contains these topics:

Mounting Options 15
PoE+ Powering Considerations 15
Grounding Considerations 16

Mounting Options

The combo mount kit supports both wall and pole mount scenarios. The Outdoor Combo Mounting Kit ships with the SDG-9712o. If you need a J-pole Mounting Kit, you can order it from Adtran.

When installing the SDG-9712o, ensure it is vertical. It must not be installed at an elevation angle exceeding 0 degrees above the horizon.

Mounting Kit	Part Number	Contents
Outdoor Combo Mounting Kit	—	Mounting bracket for wall or pole mounting
J-pole Mounting Kit	17600203F1	Pole swivel

PoE+ Powering Considerations

The SDG-9712o can be powered directly by a PoE+ switch/router or PoE+ injectors approved for connections to outdoor PoE+ powered devices.

2.5 GbE IEEE 802.3at PoE+ power source equipment (PSE) devices can include:

- PoE+ Ethernet switches/routers
- PoE+ injector

If you are not using a wired 2.5 GbE link for the SDG-9712o, the PSE does not need to be rated for 2.5 GbE PoE+.

CAUTION

The PSE devices used to power the SDG-9712o MUST be approved (for safety) for connection to load equipment (PDs) that are located outdoors or at a different building or structure. Verify that you are using appropriate PSE devices for this application. If you are unsure about the safety qualifications of your PSE devices, contact your PSE vendor.

Grounding Considerations

You can order a grounding kit from Adtran.

NOTE

Your SDG-9712o may already include the grounding kit.

Grounding Kit	Part Number	Contents
SDG-9712o Grounding Kit	TBD	• Grounding cable • Two T25 Torx security screws • T25 Torx security bit • Anti-corrosion grease — 1 oz. container

If you choose to make your own grounding cable kit, you will need these components:

- 6 AWG (16 mm^2) wire, insulated or uninsulated
- Two-hole compression lug, 6 AWG (16 mm^2), #10 (M5) hole, 5/8" (15.87 mm) spacing
- Compression lug suitable for grounded end of cable
- Two 10-32 x 3/8-inch stainless steel screws
- Anti-corrosion grease, such as No-Ox

Chapter 3: Installation

After you unpack the unit, inspect it for damage. If you notice any shipping damage, file a claim with the carrier and then contact Adtran. For more information, see Warranty.

This section contains these topics:

Installation Guidelines 17
Required Equipment 20
Mounting the SDG-9712o 21
Grounding the SDG-9712o 25
Connecting the PoE+ Port 26
Verifying the Power Connection 26
Configuring the SDG-9712o 27
Configuring the Software 27

Installation Guidelines

NOTE

Read all warnings and cautions before you install or service the SDG-9712o.

See the national, state, and local electrical codes for the requirements for power, grounding, wiring, and installation methods.

WARNING

Carefully select the installation position and make sure the product is installed in a level fashion, to not exceed the limits set forth in Safety and Regulatory. If you violate these rules, it could lead to serious federal penalty.

CAUTION

- This product is intended for outdoor deployment. Care should be taken to protect cables from damage or vandalism.
- This product can only be powered by certified and listed PoE+ power sources.
- Adtran Business Class Wi-Fi devices should be professionally installed. The SDG-9712o might need to use earth grounding to meet codes or rules. The grounding is optional unless these need to be met.

This section contains these topics:

Electrical Safety Information 18
Professional Installation 18
Installation Location 19

Electrical Safety Information

- Compliance is required with respect to voltage, frequency, and current requirements indicated on the manufacturer label. Connection to a different power source than those specified may result in improper operation, damage to the equipment, or pose a fire hazard if the limitations are not followed.
- There are no operator serviceable parts inside this equipment. Service should be provided only by a qualified service technician.
- You can optionally ground the SDG-9712o to earth using the grounding connection point located on the back of the device. Check specific local codes or your company's installation practices to see if the grounding is necessary for your specific application. Grounding is not necessary to prevent electrical shock from the device itself, if installed in accordance with this guide.
- Prior to connecting the equipment, contact a qualified electrician or the manufacturer if there are questions about the installation.
- If you ground the SDG-9712o, ensure that the grounding and bonding is in accordance with local and national wiring rules and regulations.
- In the US and Canada, labeling information for certain electrical parameters may be required in the final installation. If applicable, this information must be contained on a label:
  - The PoE+ port uses 4 conductors to carry current
  - The maximum rated voltage is 57 VDC
  - The maximum rated current per conductor is 300 mA

  You must use CAT5e or greater outdoor LAN cables that are marked CM(x) (such as CM, CMX, CMR, and CMP). Labeling is optional if the current per conductor is rated ≤300 mA per NEC. If labeling is required, the label must be located near the PoE+ port and be easily readable once the SDG-9712o is installed.

Professional Installation

This product is designed for specific applications, and Adtran recommends, but does not require, that installation be performed by trained personnel.

Installation Location

- The SDG-9712o can only be installed outdoors.
- Install the product at a location where the internal, radiating antennas can be kept 46 cm from nearby persons, in normal operating conditions, to meet regulatory RF exposure requirements.
- Carefully select the installation position. The installation angle of the device MUST be vertical to the ground to ensure proper antenna elevation. Mounting orientation is a compliance requirement.

  The SDG-9712o is certified as an outdoor access point. In the 5.15-5.25 GHz band, FCC rules limit the radiated power the unit may emit at elevation angles more than 30 degrees above the horizon (47 CFR 15.407(a)(1)(i)). The product meets that limit when it is mounted in the orientations shown in this guide.

  Mount the unit so the antenna face is vertical, with the mounting plate flush to the wall or pole. Do not tilt the unit upward. Do not mount it face-up, on a horizontal surface, or inverted. Do not substitute a different antenna. A unit mounted outside these orientations may radiate above the certified limit. It is then operating outside its FCC equipment authorization, and no longer qualifies as an unlicensed Part 15 device. If the FCC notifies the operator that the installation is causing harmful interference, the operator must stop operating the unit until the interference is resolved (47 CFR 15.5(c)).
- Proper placement of the SDG-9712o, with confirmed backhaul connectivity to the controller SDG, will positively impact for overall performance. See the SmartOS and Intellifi documentation for additional information.

Required Equipment

In addition to standard technician tools, use this equipment to install the SDG-9712o:

- T15 Torx security bit — Adtran-provided
- 1/4-inch hex driver
- 5/16-inch hex driver
- Assorted tie wraps for securing cabling
- Appropriate grounding cable, if necessary
- For pole mounting
  - Flat-head screwdriver, or 7 mm nut driver
- For masonry mounting
  - Two 3/16 inch x 1-1/4 inch hex washer head concrete screws, such as Tapcon
  - Hammer drill
  - Masonry drill bit
- For wood or fiber cement board mounting
  - Two galvanized #9 x 1-1/2 in. hex washer head wood screws
- Outdoor-rated CAT5e or better cable, 0.2 to 0.3 in. (5.08 to 7.62 mm) diameter

Mounting the SDG-9712o

Follow one of these procedures to mount the SDG-9712o:

Wall Mounting the SDG-9712o 21
Pole Mounting the SDG-9712o 23

DOCUMENTATION

See Mounting Options for additional information.

NOTE

Route and secure the cables in a manner that prevents damage.

Wall Mounting the SDG-9712o

1. Determine the location for the SDG-9712o and ensure that the LED on the bottom is visible.
2. Position the mounting bracket at the desired wall location.
3. Use a pencil or screw to mark the two screw holes on the wall.
4. For masonry installations, pre-drill the holes.
5. Use a 5/16-inch hex driver and screws to secure the mounting bracket to the wall, as shown in this figure.

   Figure 4: Securing the Mounting Bracket

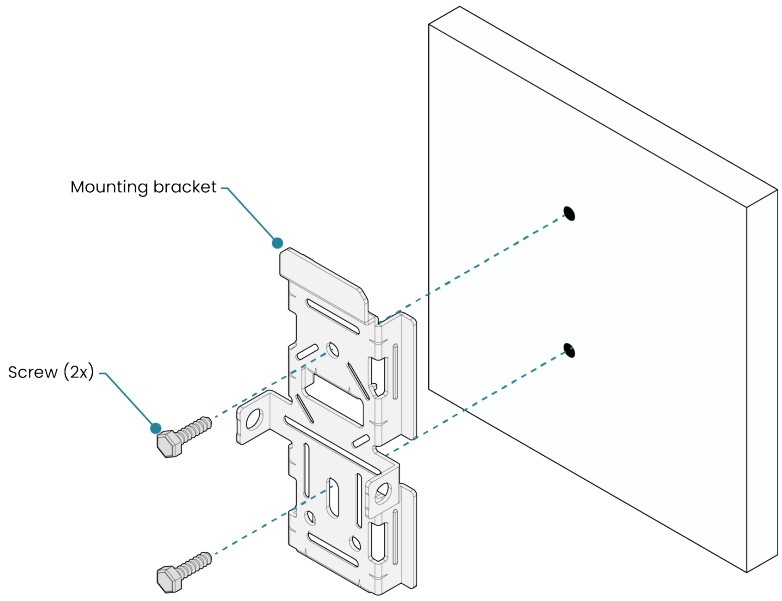

NOTE

To avoid distorting the mounting bracket and negatively impacting the attachment of the SDG-9712o, do not overtighten the screws.

6. Align the SDG-9712o rear notches with the tab on top of the mounting bracket.
7. Swivel the device into position and then tighten the two captive T15 Torx screws into the mounting bracket using the Torx T15 security bit.

Figure 5: Wall Mounting the SDG

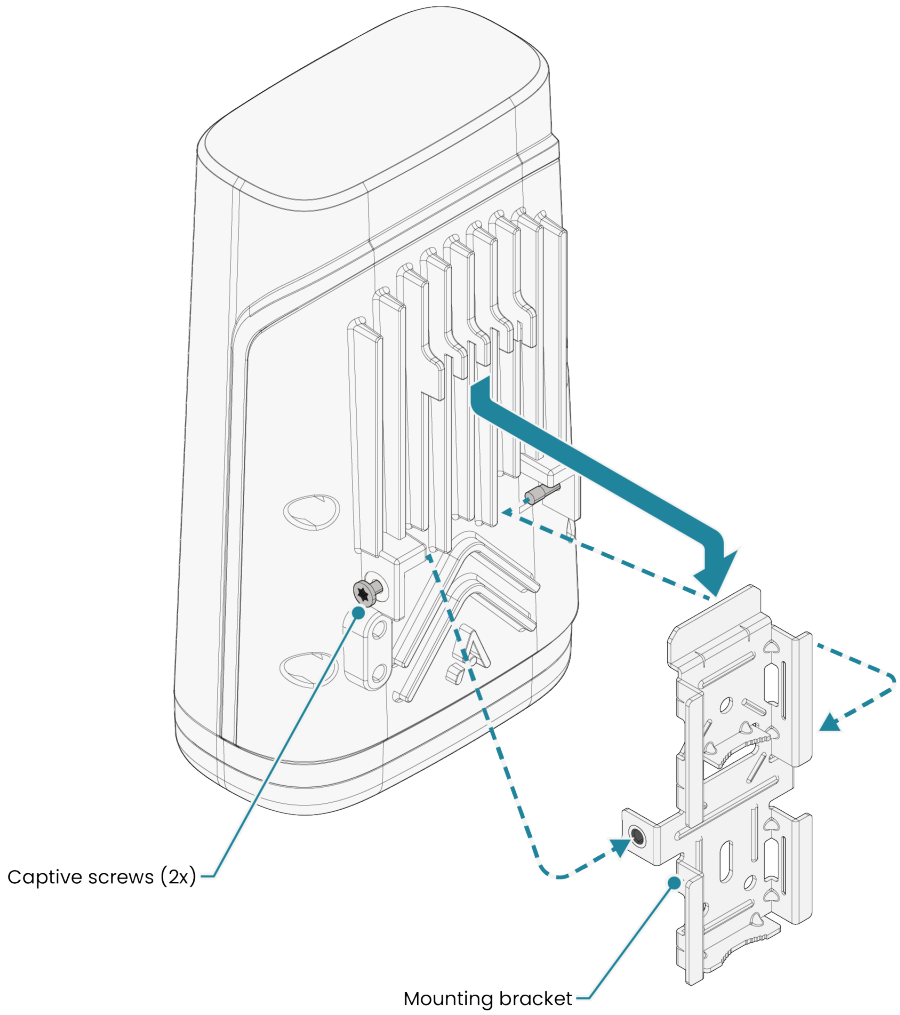

Pole Mounting the SDG-9712o

NOTE

The maximum allowable pole diameter is 2.5 inches (63.5 mm).

1. Open each metal strap by turning the screw counter-clockwise.

   Figure 6: Opening Metal Straps

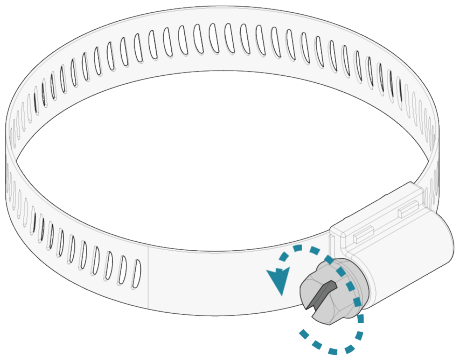

2. Straighten the end of each metal strap and slide them through the slots in the mounting bracket.

   Figure 7: Inserting Metal Straps in Mounting Bracket

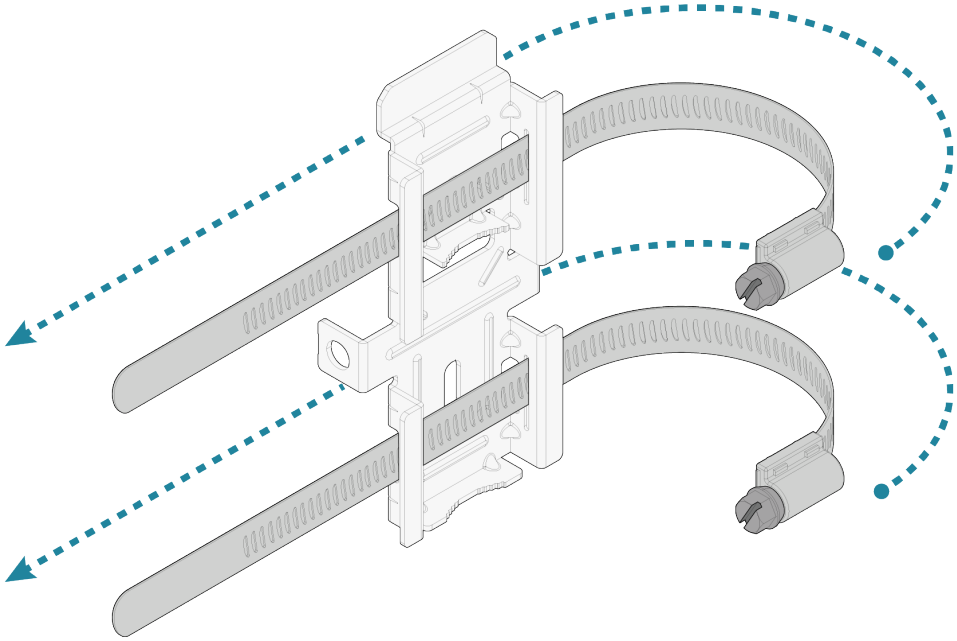

3. To secure the SDG-9712o to the pole:
   a. Wrap the metal straps around the pole.
   b. Re-insert the straps into the screw-tightening mechanisms.
   c. To tighten the straps to the pole, use a flat-head screwdriver or 7 mm nut driver to turn the screws clockwise.

   Figure 8: Pole Mounting the SDG

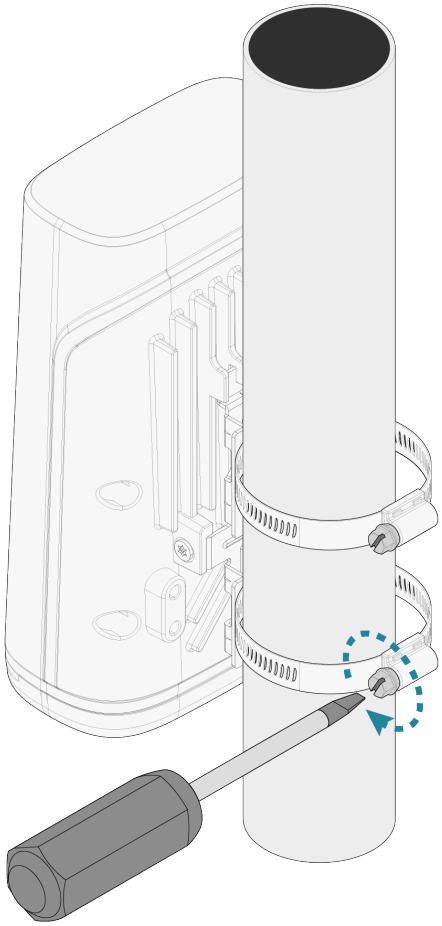

NOTE

You should mount and secure the SDG-9712o so it is in a plumb and level position on the pole.

Grounding the SDG-9712o

If you plan on grounding the SDG-9712o, see the national, state, and local electrical codes for the grounding requirements. You can use an Adtran-orderable grounding kit or provide your own. See Grounding Considerations for additional information. This procedure uses the orderable Adtran grounding cable kit:

1. Remove the plastic ground lug terminal cover.
2. Apply anti-corrosion grease to the grounding surface on the device and the ground lug on the ground cable. Rub the grease onto the metal thoroughly to absorb all moisture and to cover all irregularities on the surface. The grease should form a thin film on the mating surfaces and should not be visible.
3. Place the ground lug of the supplied grounding cable on the shank of the T25 Torx screws and use a T25 Torx security bit to secure the screws to the unit.

   Figure 9: SDG-9712o—Attaching the Grounding Lug

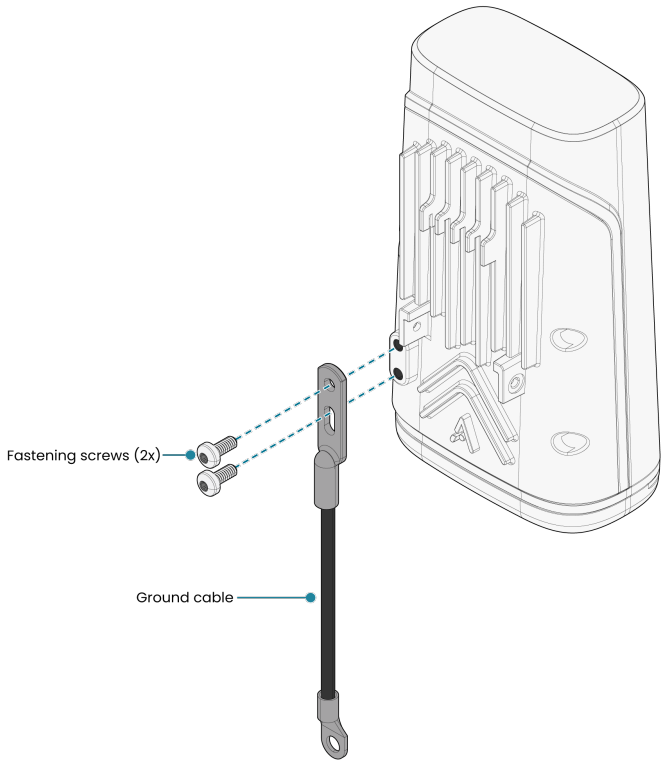

4. Attach the other end of the grounding cable to a reliable earth ground point using a similar procedure and in accordance with any applicable codes or practices.

WARNING

Adequate grounding to the unit is recommended, but optional. A clearly marked grounding location is provided on the rear of the unit for this purpose. If you are unsure if grounding is necessary or about how to properly install a ground connection, consult with a professional or electrician to ensure that all grounding and cabling is installed in compliance with the local electrical code.

Connecting the PoE+ Port

To connect the PoE+ port:

1. Loosen the four T15 Torx security screws with a Torx security bit on the bottom cover of the SDG-9712o and carefully pull down on the cover to remove it.
2. Feed an outdoor-rated CAT5e or better cable through the bottom cover of the unit, then connect to the 2.5 GbE PoE port.
3. Reattach the bottom cover and firmly tighten the four Torx security screws.
4. Connect the other end of the cable to a PoE+ source port on the router/switch or PoE+ injector.

CAUTION

- To provide more reliable operation in extreme weather conditions and temperatures, use only outdoor-rated Ethernet cable.
- If necessary, consult a professional or electrician to ensure that all grounding and cabling is installed in compliance with local electrical code.
- The SDG-9712o does not need external PoE lightning protectors. Ensure that the equipment connected to the SDG-9712o is designed and approved for connection to an outdoor PoE+ unit. Any damage or malfunction resulting from exposure of this unit to lightning or transient voltage events voids the warranty.
- When using a PoE injector for powering the SDG-9712o, ensure that the injector is rated for a minimum of 40°C if the injector is used indoors or 55°C if it is used outdoors.

Verifying the Power Connection

The SDG-9712o has no on/off power switch so it begins powering up immediately.

Locate the Status LED on the bottom of the device, as described in LED. Verify that the Power LED is green, indicating that the SDG-9712o is receiving power.

Configuring the SDG-9712o

The SDG-9712o provides a browser-based graphical user interface (GUI) to manually configure the device from a connected computer. To configure the device using SmartOS:

1. Ensure your computer is connected to the SDG-9712o using Wi-Fi.
2. Assign a static IP address to log in to the device.
3. Open a web browser and enter **http://router** or **http://setup**. A sign-in page appears. If you are unable to connect to the SDG-9712o using either of these shortcuts, you can also enter the IP address of the unit. The default IP address is **192.168.1.1**.
4. Enter the default username (**`admin`**) and password.

   NOTE

   If you have forgotten the password for this device, select **Forgot password?** and follow the instructions to reset the gateway configuration to the factory defaults.

5. Select **Sign In**. The Dashboard page appears, showing data about the system.

NOTE

If you use the Intellifi MeshView solution, follow the set up procedures in the Intellifi Mobile App.

Configuring the Software

You can manage your wireless network using the Adtran Intellifi® app, the local WebUI of the supported Adtran router, or the Adtran MeshView cloud service. For more information on configuring and using Intellifi®, see the *Intellifi® User Guide*.

Chapter 4: Troubleshooting

The SDG-9712o does not require routine hardware maintenance for normal operation. Adtran does not recommend that you attempt repairs in the field. You can obtain repair services by returning the defective unit to Adtran. See Warranty for further information. Field support for software is provided through upgrade facilities.

If the SDG-9712o does not power on, check the PoE source to make sure the connection is adequate. For more information on troubleshooting, see the *Intellifi® User Guide.*

LED

When the SDG-9712o first powers up, it performs self-tests. When the tests are complete, the LED displays the device status.

The LED on the bottom of the unit indicates the status of the device. The LEDs appear in order of operation.

Color	LED State	Indication
Initial Set Up		
Blue	Solid	Cold boot
Red	Pulsing	Reboot and system upgrade (persists over uboot)
Green	Pulsing	Linux booting up
Light blue	Pulsing	Quick start
White	Solid	Controller WAN up, Internet
Amber	Solid	Controller WAN down, no Internet
Satellite Set Up		
Purple	Pulsing	Satellite set up
White	Solid	Satellite up
Red	Pulsing	Satellite up, fair signal
Amber	Pulsing	Satellite up, poor signal
White	Pulsing	Reverting

Reset Button

If you need to reboot the SDG-9712o, press **Reset** for less than 5 seconds. You will need to remove the bottom cover to access the Reset button.

WARNING

If you press **Reset** for longer than 5 seconds, the SDG-9712o resets to factory defaults.

Chapter 5: Safety and Regulatory

This section contains these topics:

Regulatory Compliance 31
Europe - EU Declaration of Conformity 31
FCC Requirements for Operation in the United States 32
CAN ICES-3(B)/NMB-3(B) 34

WARNING

Avoid connecting directly to this product during an electrical storm. There is a remote risk of product damage or electric shock from lightning.

NOTE

The product is designed to meet:

- ETSI EN 300 019-1-1 Class 1.2 *Classification of environmental conditions; Storage*, [019-1-1 Class Number]
- ETSI EN 300 019-1-2 Class 2.3 *Classification of environmental conditions, Transportation, Class* [019-1-2 Class Number]
- ETSI EN 300 019-1-3 Class 3.3 *Classification of environmental conditions, Stationary use at weather protected locations, Class* [019- 1-3 or 4 Class Number]
- ETSI EN 300 019-1-4 Class 4.1 *Classification of environmental conditions Stationary use at non-weather protected locations*, Class [019-1-3 or 4 Class Number]

The device is designed to function without degradation during the exposure to all test severities per [019-1-3 or 4 Class Number] of ETSI EN 300 019-1-3 and [019-1-3 or 4 Class Number] of ETSI EN 300 019-1-4.

This product meets these compliance requirements:

- EU RoHS Directive. See www.adtran.com/environmental for further information on RoHS/WEEE.
- NRTL Safety Listed to the applicable UL/CSA Standards.
- Has been evaluated to applicable international standards as indicated by CE and RCM marking.

The RJ45 jack is intended for connection to outdoor-rated PoE+ CAT5e or better cabling and is not used for telephone line connection.

This equipment contains no parts that can be serviced by the user.

Regulatory Compliance

This section includes user requirements for operating this product in accordance with national laws for usage of radio spectrum and operation of radio devices. Your failure to comply with the applicable requirements can result in unlawful operation and adverse action against you by the applicable national regulatory authority.

This product's firmware limits operation to only the channels allowed in a particular region or country. Not all the options described in this guide may be available in your version of the product.

Europe - EU Declaration of Conformity

Products bearing the marking comply with these EU directives:

- EMC Directive 2014/30/EU
- Low Voltage Directive 2014/35/EU
- Radio Equipment Directive (RED) 2014/53/EU
- RoHS Directive 2015/863/EU
- WEEE Directive reference: 2012/19/EU

This equipment should be installed and operated with a minimum distance of 46 cm between the radiator and your body in normal operating conditions to meet regulatory RF exposure requirements.

This device may not be used for setting up outdoor radio links in France and in some areas the RF output power may be limited to 10 mW EIRP in the frequency range of 2454 to 2483.5 MHz. For detailed information the end-user should contact the national spectrum authority in France.

Compliance with these directives implies conformity to harmonized European standards that are noted in the EU Declaration of Conformity.

This device complies with the essential requirements of the Radio Equipment directive: 2014/53/EU and Radio Equipment Regulations 2017 (SI 2017/1206). The following test methods have been applied in order to prove presumption of conformity with the essential requirements of the Radio Equipment directive: 2014/53/EU and Radio Equipment Regulations 2017 (SI 2017/1206).

Applicable Harmonised Standards

- EN 300 328 v2.2.2
- EN 301 893 V2.1.1
- EN IEC 62311:2020
- EN 50385: 2017
- EN 50665: 2017
- EN 301 489-1 V2.2.3
- EN 301 489-17 V3.2.4
- EN 55032: 2015/ A11 : 2020
- EN 55035: 2017+A11: 2020
- EN 62368-1:2014+AC:2015+A11:2017+AC:2017-03

FCC Requirements for Operation in the United States

This section contains these topics:

FCC Information to User 32
FCC Guidelines for Human Exposure 33
FCC Declaration of Conformity 33
FCC Radio Frequency Interference Warnings and Instructions 33

NOTE

The FCC product identification and certification number are located on the bottom of the device.

To access FCC e-labeling information:

1. Open a browser to https://192.168.1.1 or https://router.local.
2. Click **Regulatory Information** at the bottom of the page.

FCC Information to User

This product does not contain any user serviceable components and should be used with approved antennas only. Any product changes or modifications will invalidate all applicable regulatory certifications and approvals.

Antenna Elevation

This device operates in the U-NII-1 band (5.18–5.24 GHz) with a composite antenna gain exceeding 6 dBi. In accordance with 47 CFR §15.407(a)(1)(i), the maximum e.i.r.p. above 30 degrees from the horizon must not exceed 125 mW (21 dBm). The antenna array of this device is oriented perpendicular to the front face of the enclosure. To maintain compliance, the SDG-9712o must be installed so that the front face of the device is oriented no more than 30 degrees above the horizontal plane. Installations that tilt the front face upward beyond 30 degrees from horizontal are prohibited. The installer is responsible for ensuring compliance with this orientation requirement. End-users must be informed of this requirement.

FCC Guidelines for Human Exposure

This equipment complies with FCC radiation exposure limits set forth for an uncontrolled environment. This equipment should be installed and operated with minimum distance of 46 cm between the radiator and your body.

Do not co-locate and operate this device in conjunction with any other antenna or transmitter except in accordance with FCC multi-transmitter product procedures.

FCC Declaration of Conformity

This device complies with Part 15 of the FCC rules. Operation is subject to these two conditions:

- This device may not cause harmful interference, and
- This device must accept any interference received, including interference that may cause undesired operation.

FCC Radio Frequency Interference Warnings and Instructions

This equipment was tested and complies with the limits for a Class B digital device, pursuant to Part 15 of the FCC Rules. These limits are designed to provide reasonable protection against harmful interference in a residential installation. This equipment generates, uses and can radiate radio frequency energy and, if not installed and used in accordance with the instructions, may cause harmful interference to radio communications. There is no guarantee that interference will not occur in a particular installation. If this equipment causes harmful interference to radio or television reception, which can be determined by turning the equipment off and on, try to correct the interference by one or more of these measures:

- Reorient or relocate the receiving antenna.
- Increase the separation between the equipment and receiver.
- Connect the equipment into an outlet on a circuit different from that to which the receiver is connected.
- Consult the dealer or an experienced radio/TV technician for help.

The specification for this product also lists FCC CFR Part 2, 2.1091 (MPE).

The operation of this device is prohibited on oil platforms, cars, trains, boats, and aircraft, except that operation of this device is permitted in large aircraft while flying above 10,000 feet.

DOCUMENTATION

For additional regulatory compliance information, download the relevant product documentation from https://adtran.com/sdg-info.

CAN ICES-3(B)/NMB-3(B)

This section contains these topics:

Canadian Department of Communications Radio Interference Regulations 34
Industry Canada 34
RSS-247 35

Canadian Department of Communications Radio Interference Regulations

This digital apparatus (Wi-Fi 7 Access Point Model SDG-9712o) does not exceed the Class B limits for radio-noise emissions from digital apparatus as set out in the Radio Interference Regulations of the Canadian Department of Communications.

Industry Canada

This device complies with RSS-247 of the Industry Canada Rules.

Operation is subject to these two conditions:

- This device may not cause harmful interference, and
- This device must accept any interference received, including interference that may cause undesired operation.

CAUTION

Radiation Exposure Statement: This equipment complies with IC radiation exposure limits set forth for an uncontrolled environment. This equipment should be installed and operated with a minimum distance of 27 cm between the radiator and any person. This device must not be co-located or operating in conjunction with any other antenna or transmitter.

ATTENTION

Déclaration d'exposition aux radiations: Cet équipement est conforme aux limites d'exposition aux rayonnements établies par ISDE pour un environnement non contrôlé. Cet équipement doit être installé et utilisé avec une distance minimale

de 27 cm entre le radiateur et toute personne. Cet appareil ne doit pas être installé à proximité d'une autre antenne ou d'un autre émetteur, ni être utilisé conjointement avec ceux-ci.

This radio transmitter (IC: 2250A-17600082) has been approved by Industry Canada to operate with the antenna types listed below. Antenna types not included in this list are strictly prohibited for use with this device.

RSS-247

CAUTION

1. This outdoor device does not permit operation within the 5150-5250 MHz band, which is restricted to indoor use only, to reduce the potential for harmful interference to co-channel mobile satellite systems;
2. The maximum antenna gain of this device is 8.68 dBi. The maximum conducted output power is 38.3 mW (15.83 dBm) in the 5250 to 5350 MHz band and 83.8 mW (19.23 dBm) in the 5470 to 5725 MHz band, resulting in maximum e.i.r.p. values of 282 mW (24.51 dBm) and 618 mW (27.91 dBm) respectively. Both values comply with the maximum permitted e.i.r.p. of 1 W (30 dBm) specified in RSS-247 Section 7.3.2. As the maximum e.i.r.p. in the 5470 to 5725 MHz band exceeds 500 mW, this device implements transmitter power control (TPC) with the capability to operate at least 6 dB below the maximum permitted e.i.r.p., as required by RSS-247 Section 7.3.2.
3. The maximum antenna gain of this device is 7.27 dBi. This device operates as a non-point-to-point system. As the antenna gain exceeds 6 dBi, the maximum conducted output power is reduced by the amount in dB that the antenna gain exceeds 6 dBi, in accordance with RSS-247 Section 7.3.3. The maximum conducted output power is 788.9 mW (28.97 dBm). This device has been certified as compliant with the e.i.r.p. limit for non-point-to-point operations in the 5725 to 5850 MHz band under RSS-247 Issue 3.
4. The antenna array of this device radiates perpendicular to the front face of the enclosure. The worst-case tilt angle necessary to remain compliant with the e.i.r.p. elevation mask requirement set forth in Section 6.2.2(3) is 30 degrees above the horizontal plane. This device must not be installed with the front face tilted upward more than 30 degrees from horizontal.
5. This device must not be used to control or communicate with unmanned aircraft systems.
6. This device must not be used on oil drilling platforms.
7. This device must not be used in aircraft, except for low-power indoor access points, indoor subordinate devices, low-power client devices, and very low-power devices operating in the 5925-6425 MHz band, that may be used in large aircraft as defined in the Canadian Aviation Regulations, while flying above 3,048 metres (10,000 feet).
8. This device must not be used on automobiles.

9. This device must not be used on trains.
10. This device must not be used on maritime vessels.

ATTENTION

1. Les dispositifs fonctionnant dans la bande 5150 à 5250 MHz sont réservés uniquement pour une utilisation à l'intérieur afin de réduire les risques de brouillage préjudiciable aux systèmes de satellites mobiles utilisant les mêmes canaux;
2. Le gain maximal de l'antenne de cet appareil est de 8,68 dBi. La puissance de sortie conduite maximale est de 38,3 mW (15,83 dBm) dans la bande 5250–5350 MHz et de 83,8 mW (19,23 dBm) dans la bande 5470–5725 MHz, ce qui correspond à des valeurs de p.i.r.e. maximales de 282 mW (24,51 dBm) et de 618 mW (27,91 dBm) respectivement. Ces deux valeurs sont conformes à la limite maximale de p.i.r.e. de 1 W (30 dBm) prescrite à la section 7.3.2 du CNR-247. Étant donné que la p.i.r.e. maximale dans la bande 5470–5725 MHz dépasse 500 mW, cet appareil met en œuvre un contrôle de la puissance d'émission (TPC) lui permettant de fonctionner à au moins 6 dB en dessous de la p.i.r.e. maximale autorisée, conformément à la section 7.3.2 du CNR-247.
3. Le gain maximal de l'antenne de cet appareil est de 7,27 dBi. Cet appareil fonctionne en mode non point à point. Étant donné que le gain de l'antenne dépasse 6 dBi, la puissance de sortie conduite maximale est réduite de la valeur en dB par laquelle le gain de l'antenne dépasse 6 dBi, conformément à la section 7.3.3 du CNR-247. La puissance de sortie conduite maximale est de 788,9 mW (28,97 dBm). Cet appareil a été certifié conforme à la limite de p.i.r.e. applicable aux opérations non point à point dans la bande 5725–5850 MHz selon le CNR-247, numéro 3.
4. Le réseau d'antennes de cet appareil rayonne perpendiculairement à la face avant du boîtier. L'angle d'inclinaison maximal nécessaire pour rester conforme à l'exigence de la p.i.r.e. applicable au masque d'élévation, énoncée à la section 6.2.2 3), est de 30 degrés au-dessus du plan horizontal. Cet appareil ne doit pas être installé avec la face avant inclinée vers le haut de plus de 30 degrés par rapport à l'horizontale.
5. Les dispositifs ne doivent pas être utilisés pour commander des systèmes d'aéronef sans pilote ni pour communiquer avec de tels systèmes.
6. Les dispositifs ne doivent pas être utilisés sur les plateformes de forage pétrolier.
7. Les dispositifs ne doivent pas être utilisés dans les aéronefs, à l'exception des points d'accès intérieurs de faible puissance, des dispositifs subordonnés intérieurs, des dispositifs clients de faible puissance et des dispositifs de très faible puissance fonctionnant dans la bande de 5 925 à 6 425 MHz, qui peuvent être utilisés dans les gros aéronefs tel qu'il est défini dans le Règlement de l'aviation canadien, et ce, lorsqu'ils volent à une altitude supérieure à 3 048 mètres (10 000 pieds).
8. Les dispositifs ne doivent pas être utilisés dans les automobiles.

9. Les dispositifs ne doivent pas être utilisés dans les trains.
10. Les dispositifs ne doivent pas être utilisés sur les navires maritimes.
11. Le fonctionnement doit être limitée à une utilisation à l'intérieur seulement.